DIVISION OF PLANNING AND PERMITTING
FREDERICK COUNTY, MARYLAND
Department of Permits and Inspections

30 North Market Street • Frederick, Maryland 21701

Phone (301) 600-2313 • Fax (301) 600-2309

BUILDING PERMIT INFORMATION
RESIDENTIAL DECK

Check each box after verifying that requirement is met for submittal.

Submittal Requirements

Verified by Staff:
Date:

1. Completed application form for Residential Uses – Decks, Attachment (A).
2. Two copies of plot plan. See sample, Attachment (B). When at all possible, a legal survey should be used. If a survey is not being used, the plot plan can be drawn by hand. It must be legible and drawn to scale. Plot plan must be on letter or legal size paper, and must include the following:
   - All property lines and property line dimensions
   - Square footage or acreage of the property
   - Building Restriction Lines (BRL) and utility easements
   - North direction arrow
   - Scale of drawing
   - Property Owner name(s)
   - Street Address of property
   - Existing dwelling and any other existing structures
   - Existing well if property is served by well.
   - Existing septic area if property is served by septic.
   - Existing driveway
   - Detailed dimensions of the proposed new construction.
   - Proposed new construction location with setbacks from the proposed new construction to property lines and/or the nearest structure IN EACH DIRECTION.
3. Two (2) sets of framing plans, per requirements noted in Attachment (C) Decks.
4. Print out from the Maryland Department of Assessments and Taxation Real Property Data website www.dat.state.md.us.
5. When property is within an incorporated town, paperwork from the town is required before a permit application may be submitted. Contact the town for details.
6. Fees are due at time of application:

Deck ***500 sf or less***	-OR-	Deck ***Over 500 sf***
$ 10.00 Automation Enhancement Fee		$ 10.00 Automation Enhancement Fee
$ 25.00 Filing Fee		$ 25.00 Filing Fee
$ 82.00 Building Fee		$ 105.00 Building Fee
$ 40.00 Zoning Review Fee		$ 40.00 Zoning Review Fee
$157.00 TOTAL PERMIT FEE		$180.00 TOTAL PERMIT FEE

and

$50.00 Health Review Fee if property is served by well and/or septic.

Notarized Letter of permission – the owner or licensed contractor must apply unless the applicant has a notarized letter of permission. The notarized letter of permission must be from the land owner, unless the permission is for a permit service to act on behalf of the contractor, and then the letter will be from the contractor giving permission to the permit service to act as an agent on their behalf.

Incorporated Towns: Same, except no Zoning Review fee; no Health Review fee unless indicated.

Walk-through Permit fees: Fees are the same as above, except there is no Health Review Fee.

Procedures

STEP ONE – APPLY FOR THE PERMIT

Where to apply: Applications are accepted in the Department of Permits and Inspections, at the above address.
When Applications Are Accepted: Applications are accepted Monday through Friday, (excluding County holidays) between 8:00am and 3:30pm. To ensure adequate time to complete your submittal, please apply prior to 3:00 pm. Walk-Through Permit applications are accepted between 8:00am and 3:00pm, Monday through Friday.

STEP TWO – OBTAIN REVIEW APPROVALS

During processing, the permit application will be reviewed by various agencies for their approval. It is important that you check status of the application and address any concerns or requests for additional information promptly.
Plan Review Timeframes:

- Walk-Through Permits. When the property is not served by individual well or septic, and the property is not within an incorporated town, the application may be considered for processing as a Walk-Through Permit. Walk-Through Permit applications are accepted, reviewed, and issued within the same day, usually within hours.
- Conventional Permits. When an application is not eligible for walk-through processing, the review timeframe of the application by Plan is one week for their initial review comments for this type of application.

Agency Review Status: Review timeframes for agencies outside of the Division of Planning and Permitting may vary. If additional information is requested by any reviewing agency during processing, a notification is mailed to the applicant. Up-to-date review status may also be obtained via the Frederick County Government website www.FrederickCountyMD.gov/DPDR.
Permit Issuance:

- Walk-Through Permits. When all reviews are completed, the approved permit packet will be prepared and issued when the applicant returns from obtaining approvals.
- Conventional Permits. The issued permit will be mailed out to the applicant usually within 24 hours of issuance. The issued permit may be held for applicant pick-up if requested.

The issued Building Permit packet will contain the permit copy, the permit placard to post on the property, inspection procedures, and additional information.

STEP THREE – OBTAIN INSPECTION APPROVALS

Inspections: The permit packet will contain valuable information regarding the inspection procedures, as well as one set of the reviewed construction plans to be kept onsite. Please read all information included in the packet when you receive it, so your inspection process goes as smoothly as possible.
Certificate of Completion: The end result of the permitting process is the issuance of the Certificate of Completion. The Certificate of Completion is issued when all final inspections have been approved and the construction has been approved for use. It is mailed to the applicant of the Building Permit.

OTHER GENERAL INFORMATION REGARDING BUILDING PERMITS

- All fees must be paid at time of application, by check, cash or credit card (fees apply to all credit and debit card transactions). Permit fees are calculated for each permit application. Each structure, use or permit type require a separate permit application.
- Building fee is charged according to the square footage of the deck. Any increment of a foot is dropped from the measurements.
- Building Permits are non-transferable and non-assignable.
- Electrical and Plumbing Permits are separate permits with separate fees. The licensed person, or a property owner that passes a Homeowner Electrical or Plumbing Exam and is going to do the work applies for these permits.
- *Time Limitation of Application*: An application for a permit for any proposed work shall be deemed to have been abandoned six months after the date of filing, unless such application has been pursued in good faith or a permit has been issued; except that the Building Official is authorized to grant 1 or more extensions of time for additional periods up to 1 year each. The fee to extend a permit application or a building permit is the minimum permit fee of $45.00. Each request to extend a permit shall be made in writing with justification and received *in advance* of expiration date.
- *Refunds*: Filing fees are non-refundable and non-transferable. In the case of an abandonment or discontinuance of a project that has been made and, upon cancellation, 50 percent of the fee paid, less the minimum fee may be refunded, provided (1) No construction has occurred, and (2) The request for refund is received prior to the expiration date of the permit. The request must be made on a form provided by the County. Revoked, suspended, expired or invalid permits are not eligible for refunds.
- *Revisions:*
    - Revisions to a permit or application are $25.00.

CONTACTS FOR BUILDING PERMIT APPLICATIONS

General Information 301-600-2313
Customer Service Supervisor, Building Permits (processing or fee questions).....301-600-1089
Plan Reviewer (for construction plans) 301-600-1086
Zoning Reviewer (plot plans, setbacks, use, flood plain, building height) 301-600-1143
Environmental Health (well and septic information) 301-600-1726
Manager of Permitting Services 301-600-1089

ATTACHMENT (A) - DECK

DIVISION OF PLANNING AND PERMITTING
DEPARTMENT OF PERMITS AND INSPECTIONS
30 NORTH MARKET STREET
FREDERICK, MARYLAND 21701
301-600-2313 INFORMATION

A/P #
Process Date:
Application Reviewed By (initials):

Building Permit Application for DECK

SECTION I: CONTACT INFORMATION

Property Owner			Home Improvement Contractor		
Name(s) of person (s) deck is being constructed for:			*Contractor must apply when contracted to do work.*		
Current street address for above person(s):			*MHIC license number:*	*Exp Date:*	
Town:	*State:*	*Zip:*	*Current street (mailing) address for Contractor:*		
Owner telephone Number: *(please give the best number to reach owner during the day)*			*Town:*	*State:*	*Zip:*
Permit Service			*Contact Person for Contractor:*		
Name of Permit Service when applicable:			*Contractor Telephone Number:* *Fax #*		
Street (mailing address) :			*Contractor e-mail Address:*		
Town:	*State:*	*Zip:*			
Contact Person for Permit Service (Applicant/Contact)					

SECTION II: PROPERTY INFORMATION

Current Property Owner(s):			*Property Address Where Deck is to be Constructed:*		
Eight Digit Property Tax ID (account) #			*Town:*	*State:*	*Zip:*
Acreage or Square Footage of Property:			*Subdivision Name:*		*Lot #*
Water Type : Well ☐ Community ☐	*Sewer Type :* Septic ☐ Community ☐		*Is Property Within an Incorporated Town?* Yes ☐ No ☐		

Is there a roadside tree that will be disturbed or removed due to the proposed construction?(A roadside tree is defined as a plant that has a woody stem or trunk that grows all, or in part, within the right-of-way of a public road.)
Yes ☐ No ☐

Walk-Through Permits
When property is served by public water and sewer, *and* property is not within an incorporated town, application may be eligible to be processed as a walk-through permit. If you would like to process this application as a walk-through, please check here: ☐

BUILDING PERMIT APPLICATION FOR DECK - PAGE TWO OF TWO

Cost of Construction: _____
includes electrical, plumbing, labor & materials

Dimensions of Deck (each level)

ft	**X**	ft
ft	**X**	ft
ft	**X**	ft

Steps to Grade? Y or N _____

Total square footage of deck: _____

Setbacks From Deck to Property Lines/or Nearest Structure in Each Direction (3 required):

Front	_____
Rear	_____
Left	_____
Right	_____

Any Electrical Work Involved Y or N _____
Any Plumbing Work Involved Y or N _____

OTHER INFORMATION CONCERNING THE CONSTRUCTION THAT WILL ASSIST IN PROCESSING

IMPORTANT - PLEASE READ CAREFULLY

The Applicant hereby certifies under the penalties of perjury, and agrees as follows: 1) That he/she is authorized to make this application, 2) that the information is correct, 3) that he/she will comply with all regulations of Frederick County which are applicable hereto, 4) that he/she will perform no work on the referenced property not specifically described in the application: 5) that he/she knows that this permit does not include electrical or plumbing work: electrical and plumbing work requires a separate permit. Any change without approval of the agencies concerned shall constitute sufficient grounds for the disapproval of a permit. The appropriate revision fee shall be charged.

Permit Application Extension:
The permit application is valid for 6 months. The fee to extend an application is the minimum fee. The request must be made in writing prior to the expiration date, with justification. Each extension for an application shall not exceed 6 months.

Properties Served by County Water and Sewer:
It is the applicant's responsibility to identify and disclose any water and/or sewer utilities or easements, in, on, or near the proposed improvements. Approval of ths permit by DUSWM shall not, on behalf of the County Executive, be construed as a modification or amendment of any water or sewer easement nor constitute permission to encroach thereon. Should an encroachment be found in the future, the cost to remedy said encroachment shall be borne by the propery owner.

Signature of Applicant _____

Please print name _____

Connection with application _____

8/2015

SAMPLE PLOT PLAN :

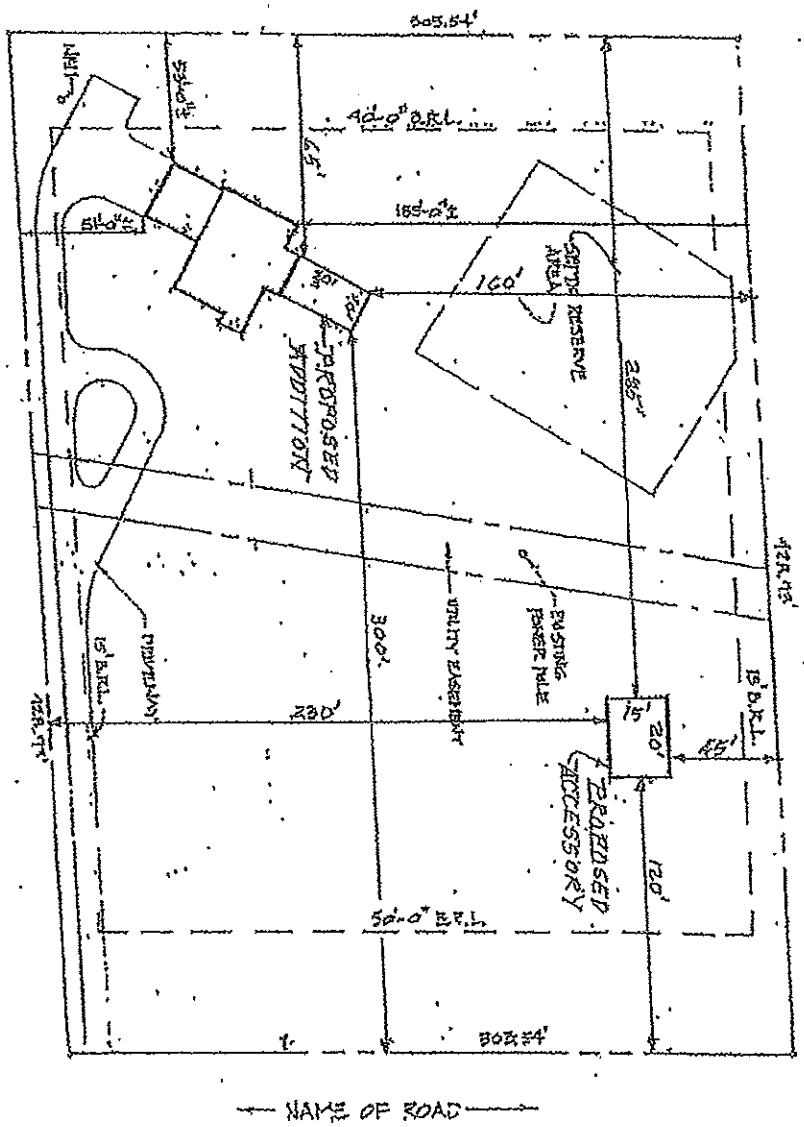

SUBDIVISION NAME:		OWNER/APPLICANT NAME:	DRAWING SCALE:
LOT #:	LOT SIZE:	PROPERTY ADDRESS:	PROPERTY TAX I.D. NO.

DECK INFORMATION GUIDE

FREDERICK COUNTY DEPARTMENT OF PERMITS AND INSPECTIONS
30 NORTH MARKET STREET FREDERICK, MD 21701 (301) 600-1086
(This guideline assumes all lumber to be preservative-treated Southern Pine.)

1. GENERAL:
-Deck structures shall be designed for a minimum 40 lb. per sq. ft. live load.
-All wood should be preservative-treated or an approved alternative.
-Fasteners and connectors for preservative-treated wood shall be of hot dipped, zinc-coated galvanized steel, stainless steel, silicon bronze or copper.
-Any alternate decking, guard, and/or handrail material used **must be approved by Frederick County.**

2. PLANS:
-2 sets of plans with dimensions shown are required. Framing plans need to clearly show each level. **Computerized plans from Home Centers/Lumber Yards with separate material list will not be accepted unless the framing plans have the structural elements clearly labeled on the drawings themselves.**

3. FOOTINGS:
-Poured concrete footings should be a minimum of 8" wider than the posts (4x4 post - 12" min. width, 6x6 post - 14" min. width). Larger footings may be required with certain load conditions.
-The bottom of footings must be a minimum of 30" below finish grade level.
-Footings must be a min. of 8" thick poured concrete below bottom of post. No gravel beneath footings.
-Suggest footings be placed at least 36" away from the house foundation to avoid the backfill area.

4. POSTS:
-Post can be set directly on the footing with tamped back-fill – min. 12", enclosed in concrete below grade-min. 12", or on top of a pier at grade with an approved post anchor.
-Posts should be a minimum 4x4 lumber size at max. 8' height, 4x6 at max. 8' and 6x6 at max.14'.
-For posts over 10'-0" tall cross bracing is recommended.

5. LEDGERS:
-Ledgers should be the same size lumber as the joists or larger (min. 2 x 8) and shall be properly bolted to **solid structural material** of the house (not sheathing). See **'Ledger Fastener Table'**.
-Acceptable ledger fasteners are: lag screw with washer, square/hex headed through-bolt with nut & washers and Ledger-Lok fasteners or similar approved products.
-Decks or a portion thereof are required to be self-supporting when attaching to an existing house cantilever. Also, if the house band board cannot be verified as structurally adequate, then the deck must be freestanding.

6. BEAMS:
-Beams must be securely connected to the posts and joists with hardware and appropriate fasteners.
-For maximum beam span between posts see **'Deck Beam Span Lengths Table'**.
-Note: Certain framing conditions may change those allowable spans.

7. JOISTS:
-For max. joist spans see **'Joist Span Table'**.
-Joists can be set in hangers on the face of the beam or cantilevered over the top of the beam.
-A min. of 4 fasteners are required for lateral load connections; for example Simpson Strong-Tie DTT1Z. For alternative use 2 Simpson Strong-Tie DTT2Z or similar. Install per manufacturers requirements.
-Deck joists shall be permitted to cantilever not greater than one-fourth of the actual joist span.
-For best strength the max. joist cantilever distance should not exceed: (16" o.c. assumed spacing)

2 x 8's: 2' **2 x 10's: 3'** **2 x 12's: 4'**

8. DECKING:

-Wood decking requires a min. of 2 fasteners into each supporting member (i.e. joist).
-When using different size/thickness of lumber or composite material follow the manufacturer's recommendations.
-Suggestion: To strengthen the deck structure, the decking may be set at 45 degree angle across the joists. (Joists may require closer spacing.)

9. RAILS:

-Guards on decks shall be a minimum of 36" in height above the deck surface and are **required** on decks over 30" above grade or level below. Railing systems shall be able to resist a concentrated load of 200 lbs. on or against the top rail at any point and direction.
-Guard in-fill components shall be designed to withstand a horizontally applied normal load of 50 lbs. per sq. ft.
-Guards on stairs must be 34" minimum vertically above the tread nosing if the stairs are 30" above grade.
-Balusters/pickets shall have no more than a 4" space between them on level surfaces and no more than 4 3/8" space along the run of stairs.
-The triangular openings at the open side of stair shall not allow passage of a sphere 6 inches in diameter.
-Continuous graspable handrails on stairs shall be between 34" and 38" above the tread nosing (measured vertically) and are **required** on stairs with 4 or more risers. The handgrip portion shall have a circular cross section of 1 ¼" minimum to 2" maximum.

10. STAIRS & RAMPS:

-Stairs and ramps shall not be less than 36" in clear width at all points above the permitted handrail height.
- Max. riser height is 7 3/4". Max. riser opening is 4" when more than 30" above floor or walking surface.
- Min. tread depth is 10" measured horizontally from face of nosing to face of nosing. (Nosing not required if tread is min. 11").
-The greatest riser height/tread depth within any flight of stairs shall not exceed the smallest height/depth by more than 3/8" (Tread and riser dimensions cannot exceed min./max. of above items respectively).
-Stringers should be the same as deck joist or per **'Joist Span Table'.**
-Exterior stairways shall be provided with a means of illumination at the top of landings.
-Ramps serving the egress door shall have a slope of not more than 1 unit vertical in 12 units horizontal. All other ramps shall have maximum slope of 1 unit vertical in 8 units horizontal.
-All guards, handrails and lighting requirements for stairs also apply to ramps.

Code References:
ICC International Building Code 2015
ICC International Residential Code 2015

LEDGER FASTENER TABLE

CONNECTION DETAILS	JOIST SPAN						
	6′ and less	6′1″ to 8′	8′1″ to 10′	10′1″ to 12′	12′1″ to 14′	14′1″ to 16′	16′1″ to 18′
	On-center spacing of fasteners						
$^1/_2$-inch diameter lag screw with $^1/_2$-inch maximum sheathing[c, d]	30	23	18	15	13	11	10
$^1/_2$-inch diameter bolt with $^1/_2$-inch maximum sheathing[d]	36	36	34	29	24	21	19
$^1/_2$-inch diameter bolt with 1-inch maximum sheathing[e]	36	36	29	24	21	18	16

For SI: 1 inch = 25.4 mm, 1 foot = 304.8 mm, 1 pound per square foot = 0.0479 kPa.

a. Ledgers shall be flashed in accordance with Section R703.8 to prevent water from contacting the house band joist.

b. Snow load shall not be assumed to act concurrently with live load.

c. The tip of the lag screw shall fully extend beyond the inside face of the band joist.

d. Sheathing shall be wood structural panel or solid sawn lumber.

e. Sheathing shall be permitted to be wood structural panel, gypsum board, fiberboard, lumber or foam sheathing. Up to $^1/_2$-inch thickness of stacked washers shall be permitted to substitute for up to $^1/_2$ inch of allowable sheathing thickness where combined with wood structural panel or lumber sheathing.

DECK BEAM SPAN LENGTHS TABLE

SPECIES[c]	SIZE[d]	DECK JOIST SPAN LESS THAN OR EQUAL TO: (feet)						
		6	8	10	12	14	16	18
Southern pine	2 – 2 × 6	6-11	5-11	5-4	4-10	4-6	4-3	4-0
	2 – 2 × 8	8-9	7-7	6-9	6-2	5-9	5-4	5-0
	2 – 2 × 10	10-4	9-0	8-0	7-4	6-9	6-4	6-0
	2 – 2 × 12	12-2	10-7	9-5	8-7	8-0	7-6	7-0
	3 – 2 × 6	8-2	7-5	6-8	6-1	5-8	5-3	5-0
	3 – 2 × 8	10-10	9-6	8-6	7-9	7-2	6-8	6-4
	3 – 2 × 10	13-0	11-3	10-0	9-2	8-6	7-11	7-6
	3 – 2 × 12	15-3	13-3	11-10	10-9	10-0	9-4	8-10

JOIST SPAN TABLE

SPECIES[a]	SIZE	SPACING OF DECK JOISTS WITH NO CANTILEVER[b] (inches)			SPACING OF DECK JOISTS WITH CANTILEVERS[c] (inches)		
		12	16	24	12	16	24
Southern pine	2 × 6	9-11	9-0	7-7	6-8	6-8	6-8
	2 × 8	13-1	11-10	9-8	10-1	10-1	9-8
	2 × 10	16-2	14-0	11-5	14-6	14-0	11-5
	2 × 12	18-0	16-6	13-6	18-0	16-6	13-6

MAXIMUM JOIST SPACING FOR DECKING TABLE

MATERIAL TYPE AND NOMINAL SIZE	MAXIMUM ON-CENTER JOIST SPACING	
	Perpendicular to joist	Diagonal to joist[a]
$1^1/_4$-inch-thick wood	16 inches	12 inches
2-inch-thick wood	24 inches	16 inches
Plastic composite	In accordance with Section R507.3	In accordance with Section R507.3

Standard Deck Construction Information

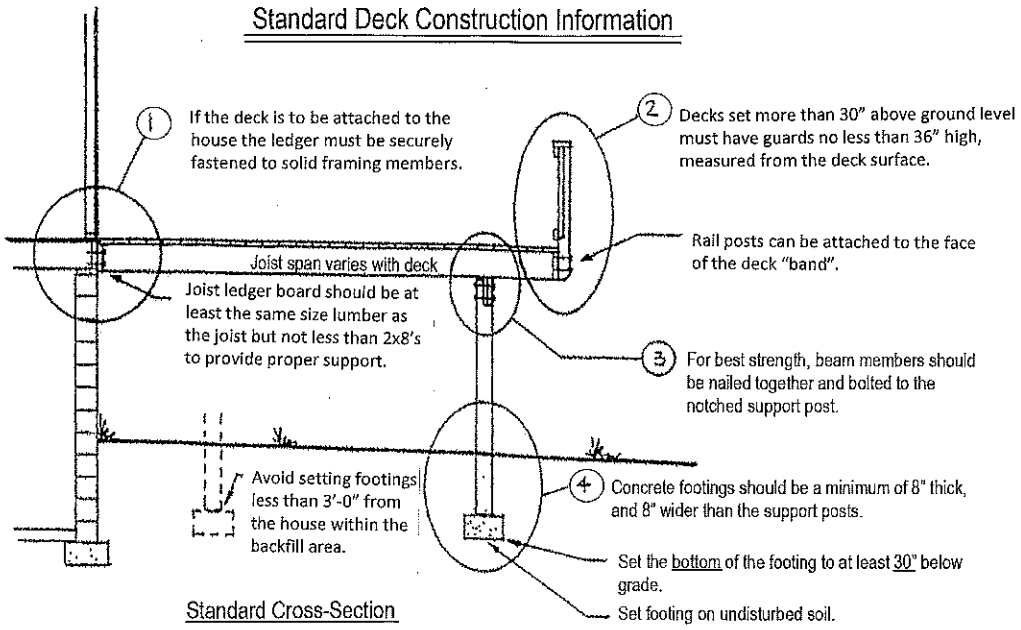

Standard Cross-Section

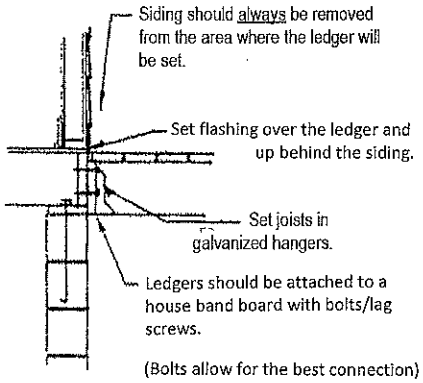

1 Ledger Detail
Shown for Frame/Siding Condition

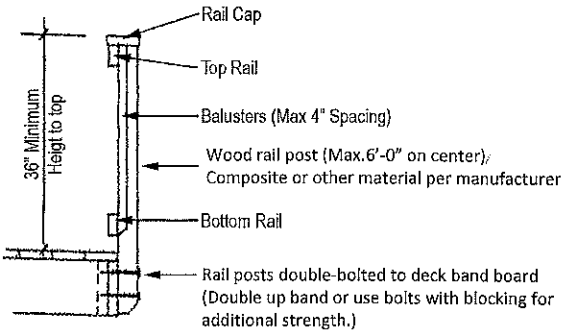

2 Railing Detail
Typical Detail - Many Variations Available

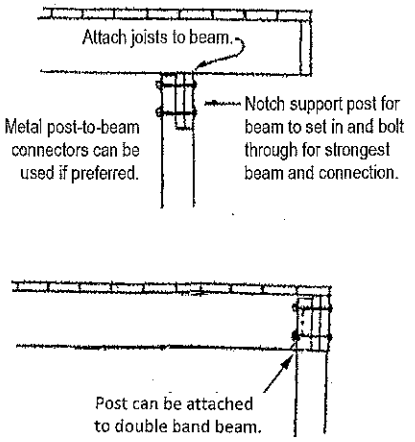

3 Beam/Post Detail

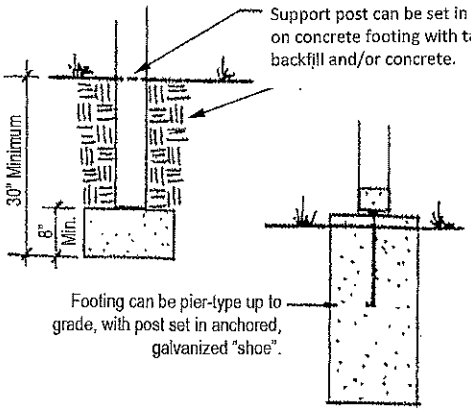

4 Footing Detail

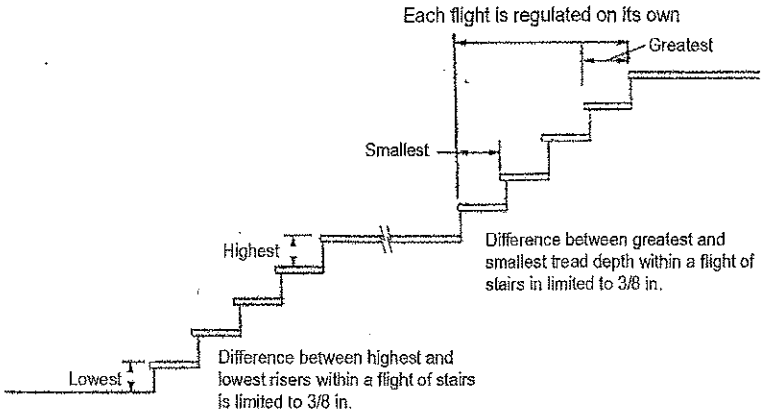

Stair Tolerances

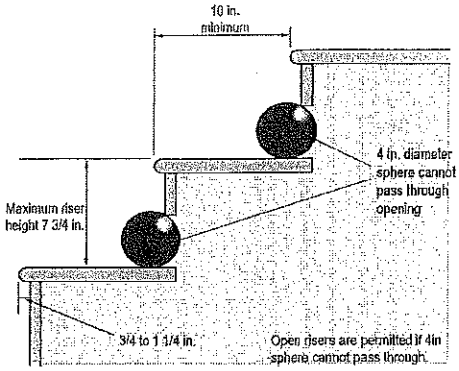

Tread/Riser Profile
(Open Riser)

Handrail/Guard

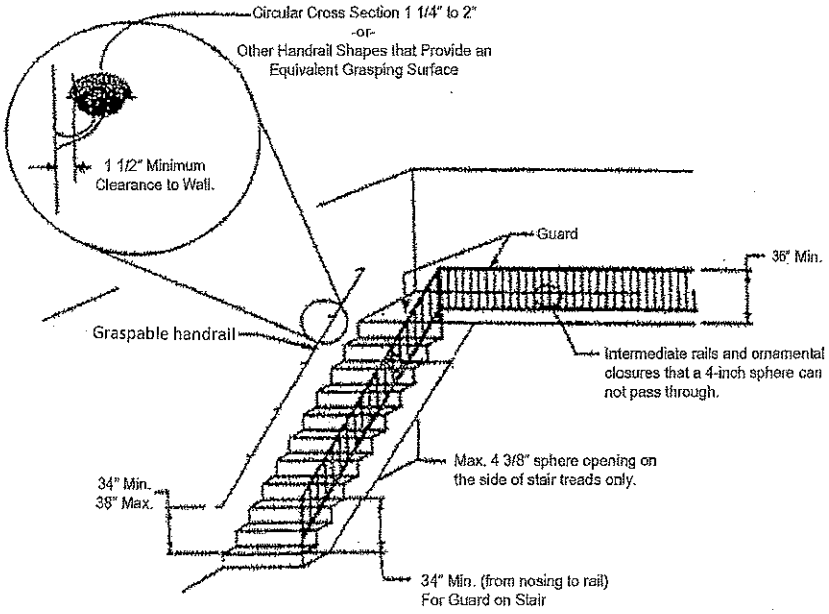
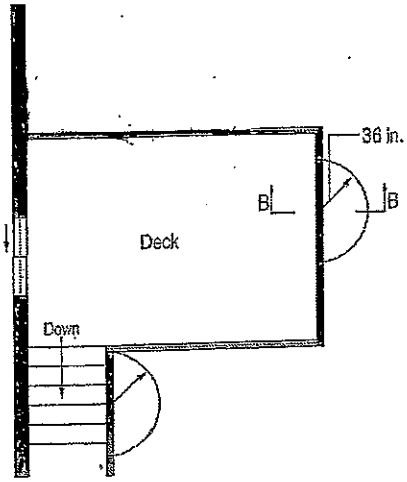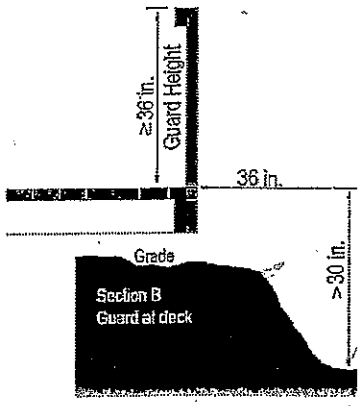
If a stairway has four or more risers, then the stairway requires a graspable handrail on at least one side.